## Concealed bath system frame INEO RIM

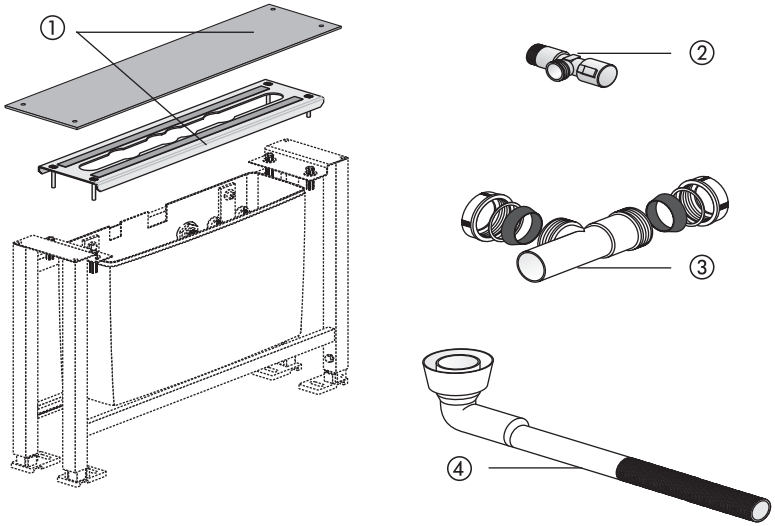


| No. | Name | Code No. | Recommended price/€ |
|---|---|---|---|
| 1 | Cover concealed bath system frame | 05.226.00..0000 | |
| 2 | Angle valve G ½ x G ½ | 04.273.00..0000 | |
| 3 | T-piece d: 32 mm with non-return valve | 01.379.00..S000 | |
| 4 | Outlet bend for hose box | 05.225.00..0000 | |