DISCONTINUED PRODUCT – Finishing set for ready-to-tile grid, stainless steel channel, width 70 mm

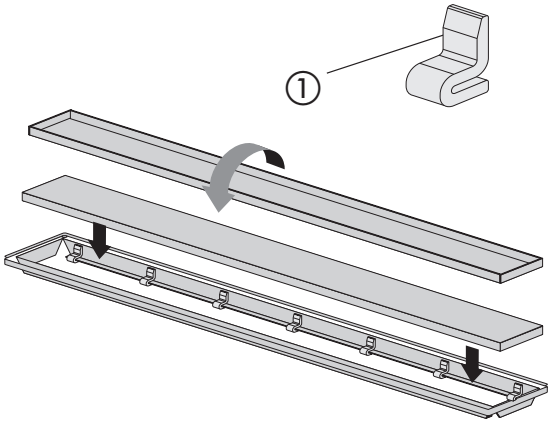

L		Granit/ Marmor
650	10 x	645 x 48 x 13
750	10 x	745 x 48 x 13
850	14 x	845 x 48 x 13
950	14 x	945 x 48 x 13
1150	14 x	1145 x 48 x 13

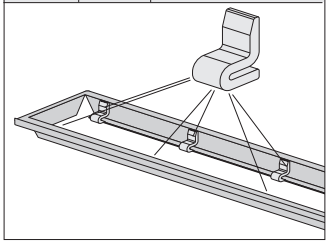

No.	Name	Code No.	Recommended price/€
1	Support piece (14 pcs.)	04.123.00..0000	