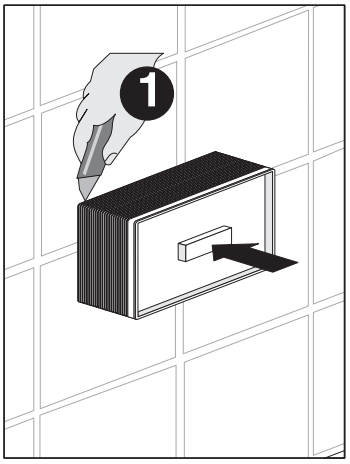
1

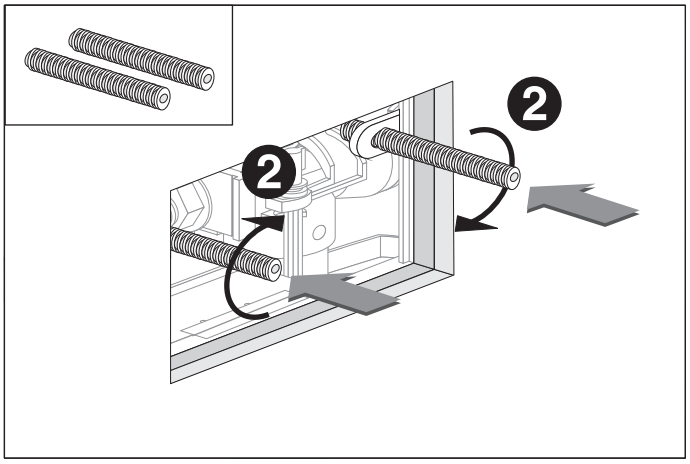
2
2

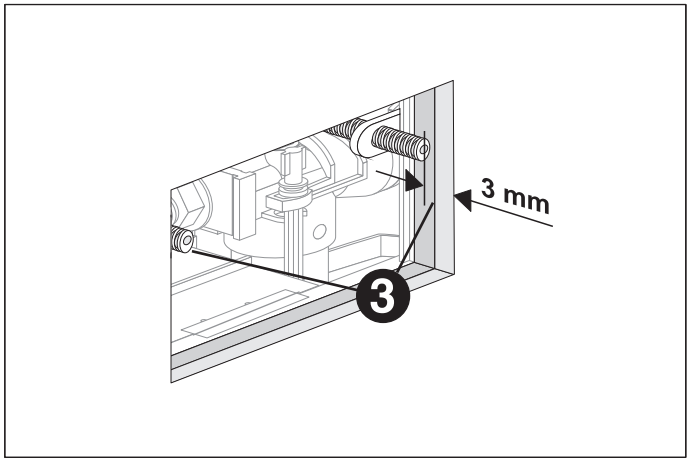
3 mm
3

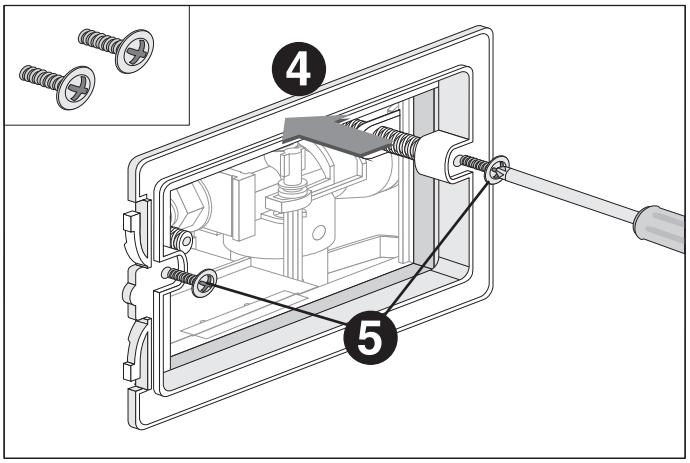
4
5

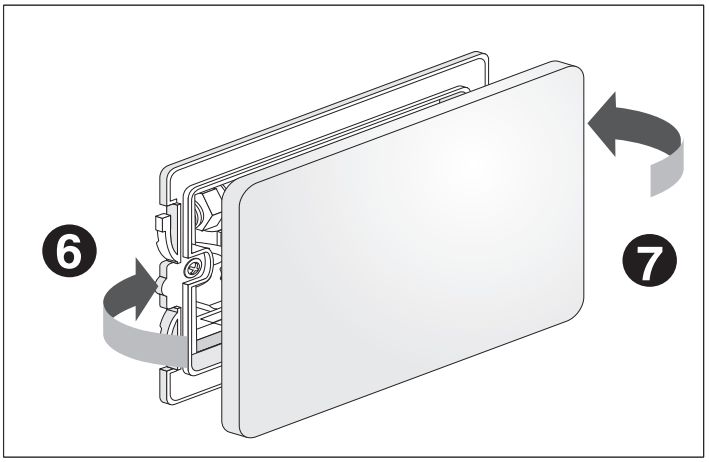
6
7

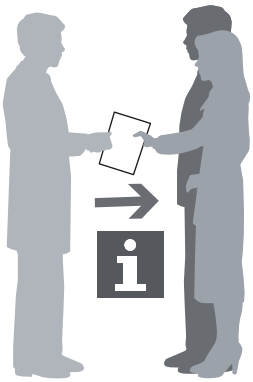

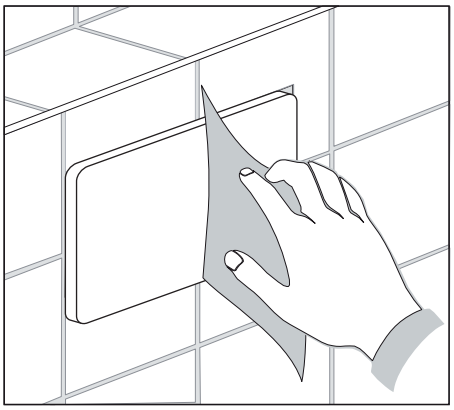
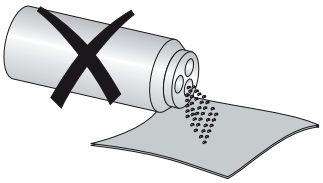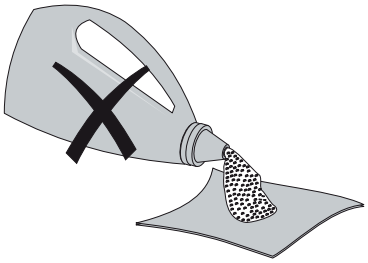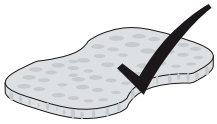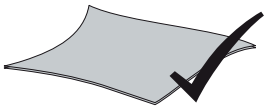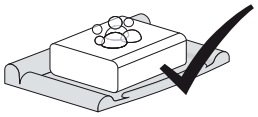
Chlor
Chlorine
(Cl)