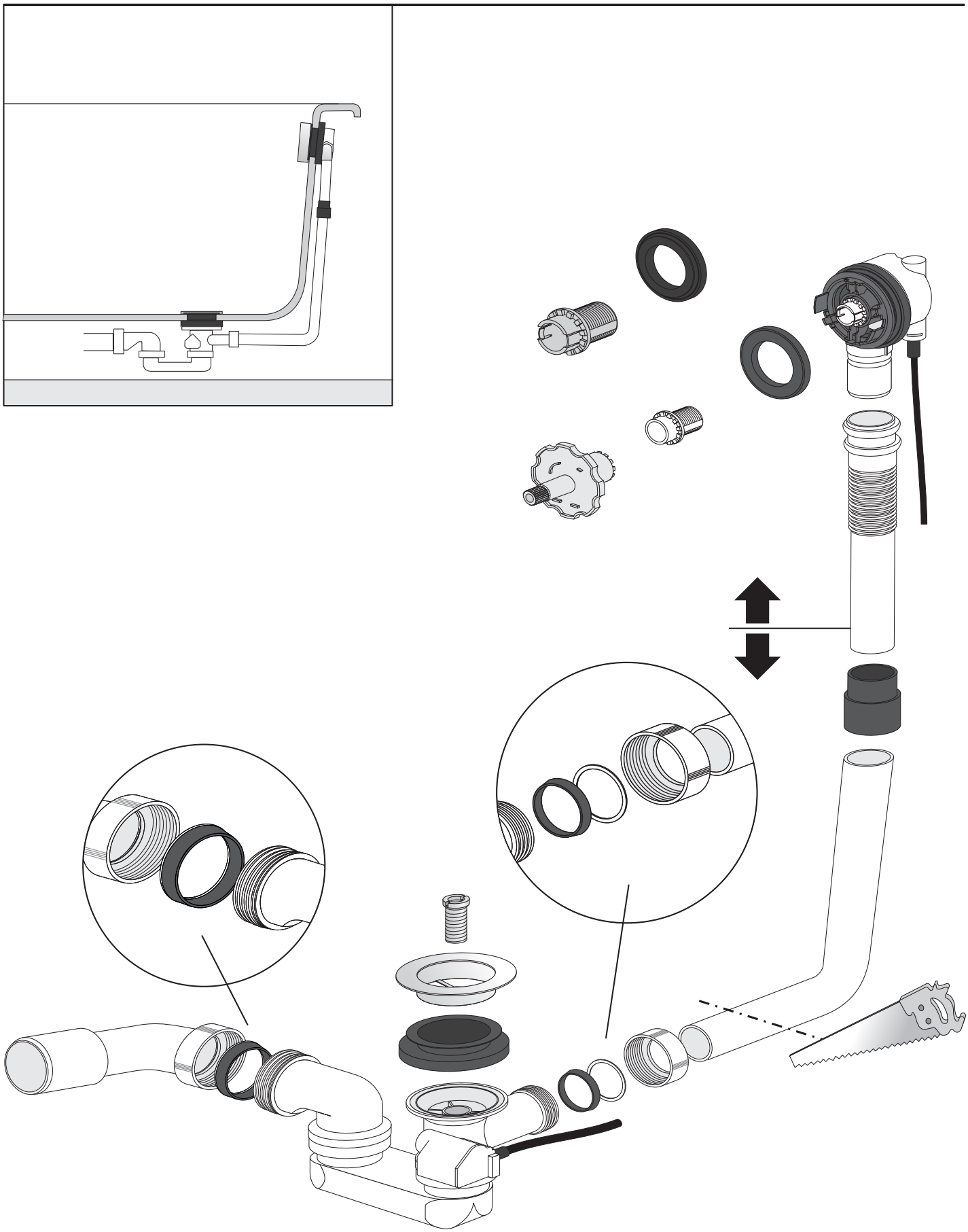

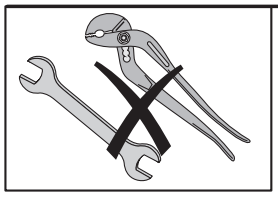

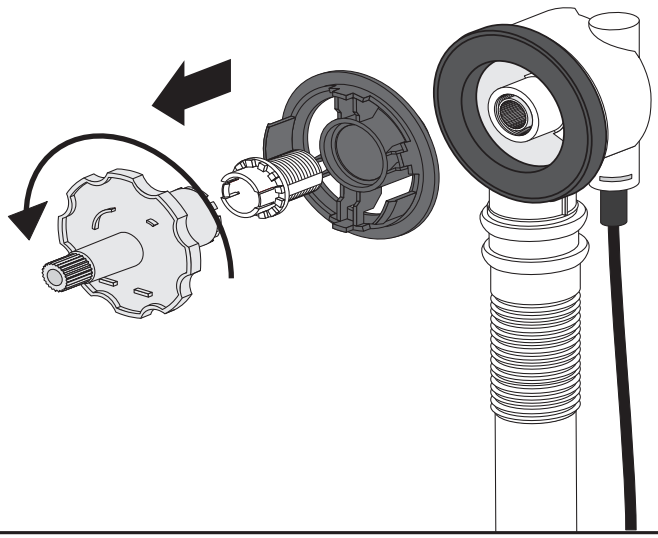

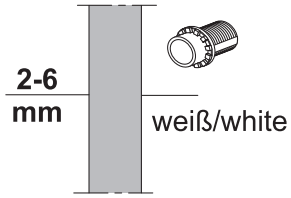
2-6
mm
weiß/white

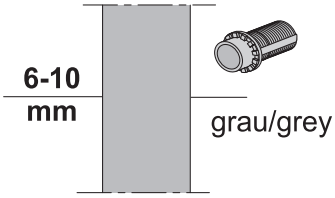
6-10
mm
grau/grey

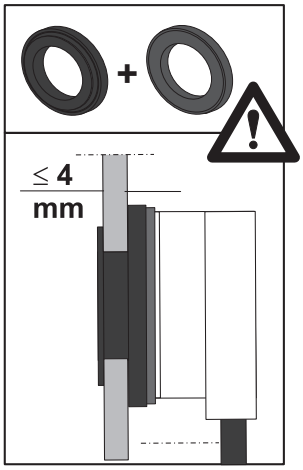
+
≤ 4
mm

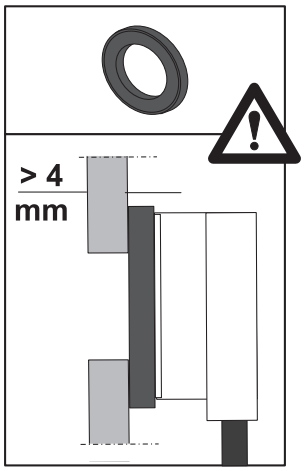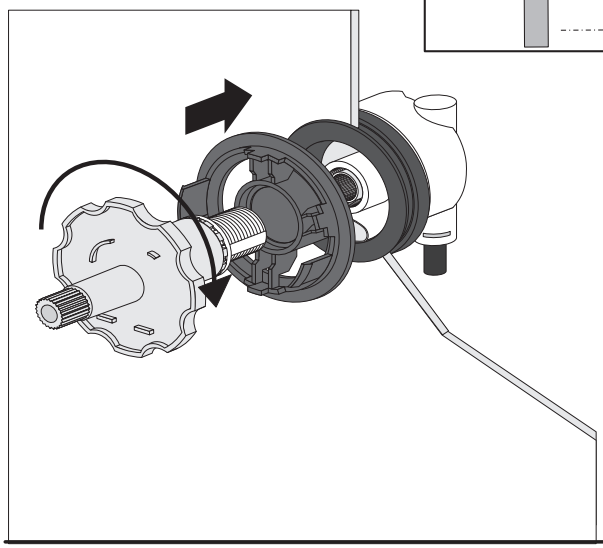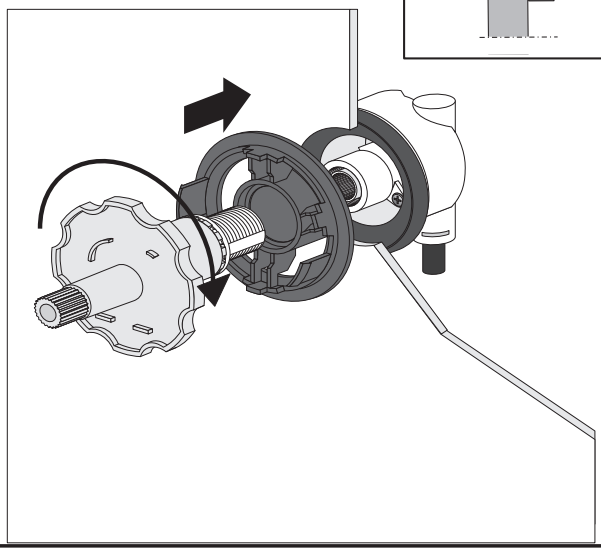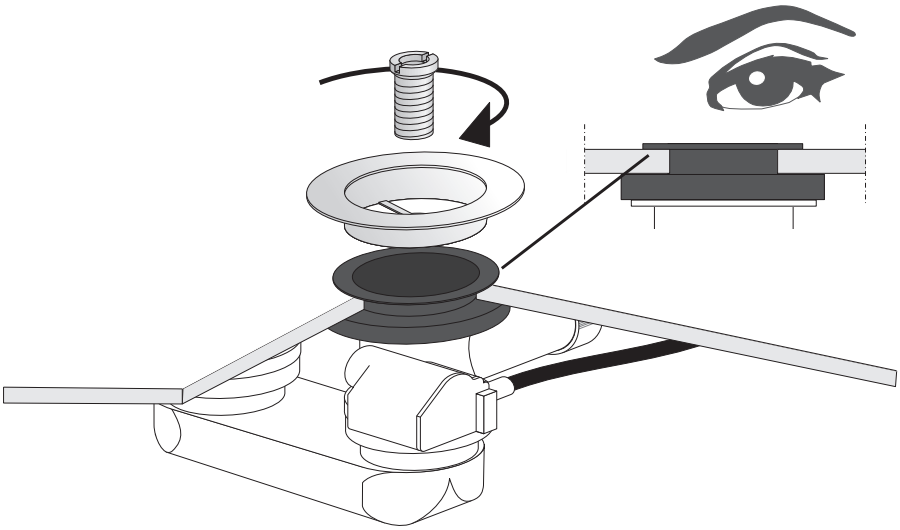
> 4
mm