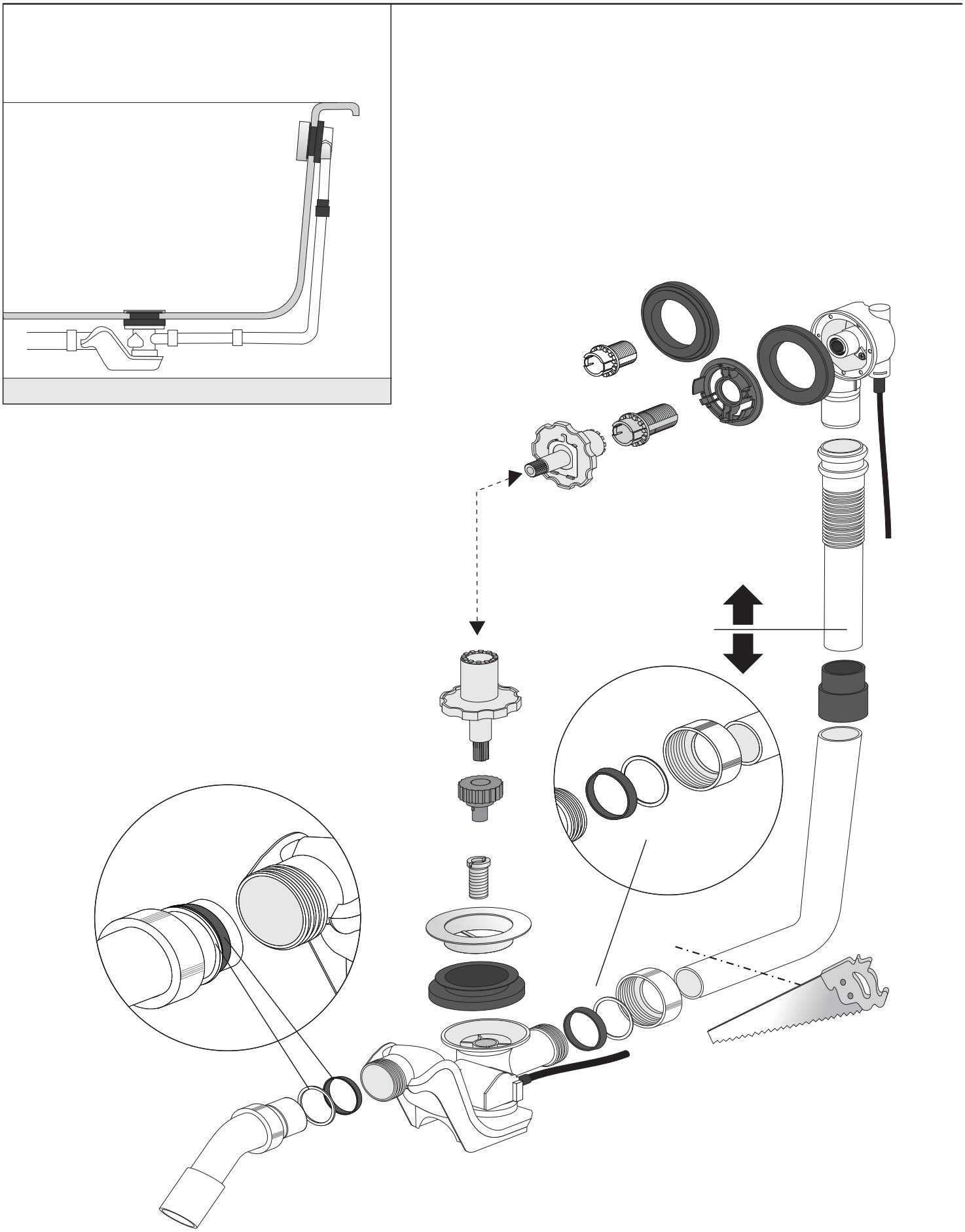

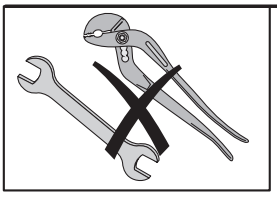

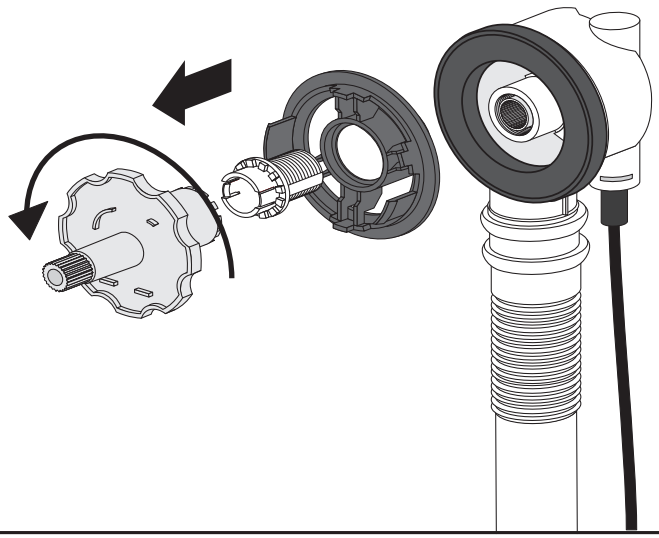

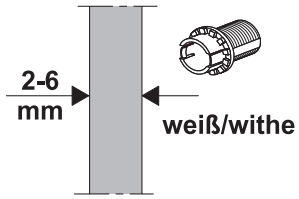
2-6
mm
weiß/withe

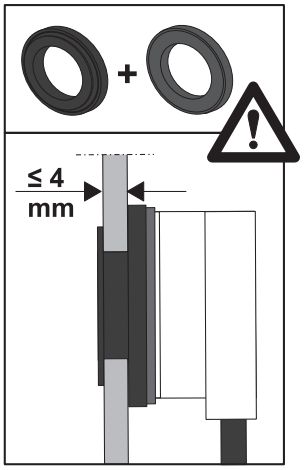
+
≤ 4
mm

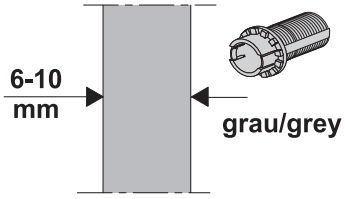
6-10
mm
grau/grey

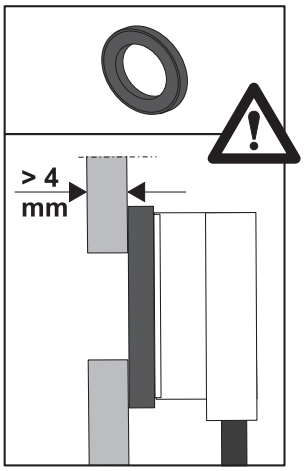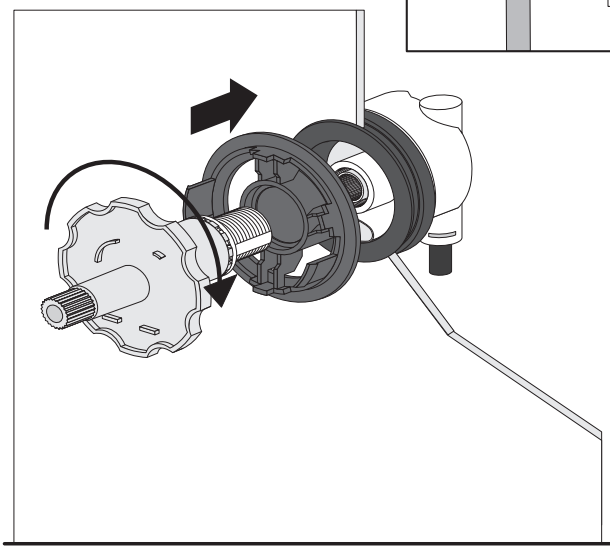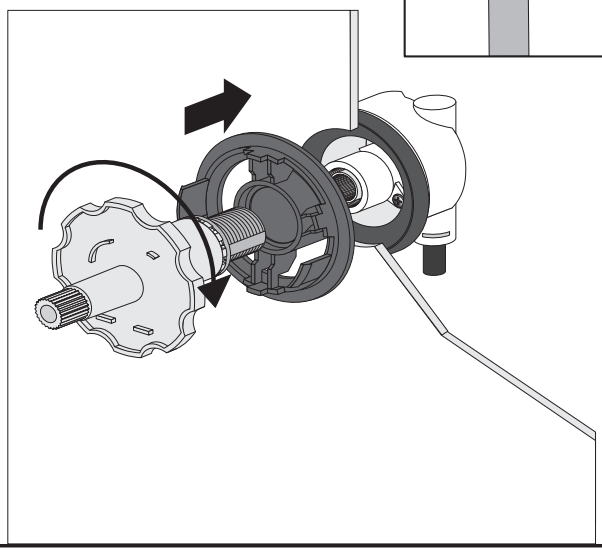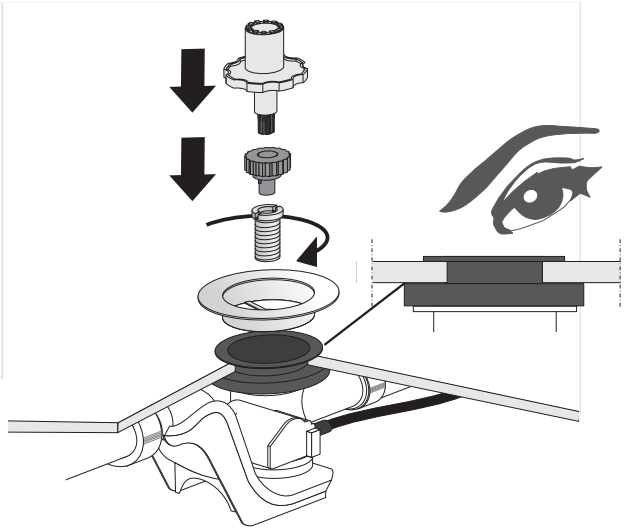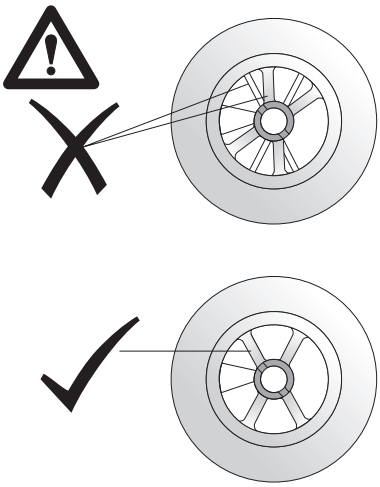
> 4
mm