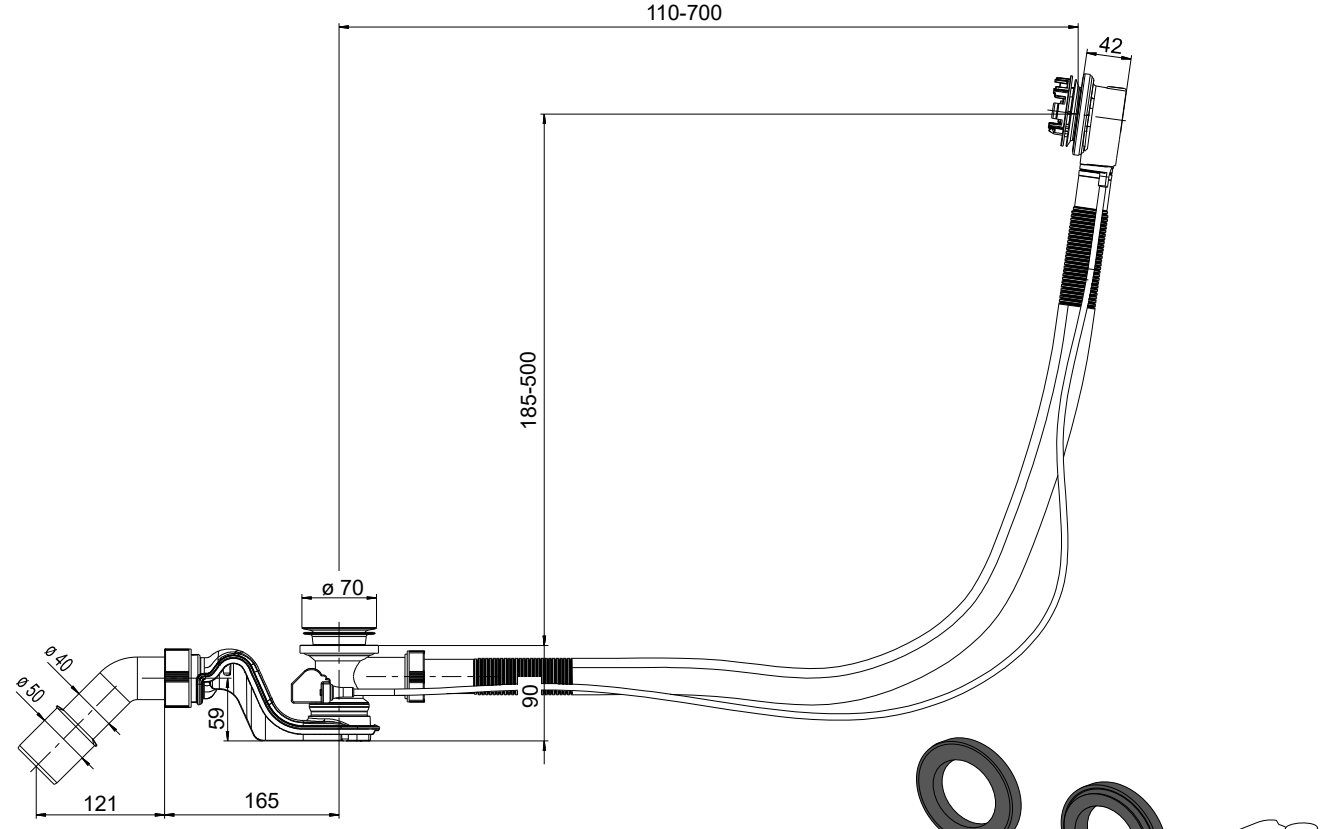
110-700
42
185-500
ø 70
ø 40
ø 50
59
90
121
165

Basic
05.097.81..0000
Swing
05.098.81..0000
Basic
Swing

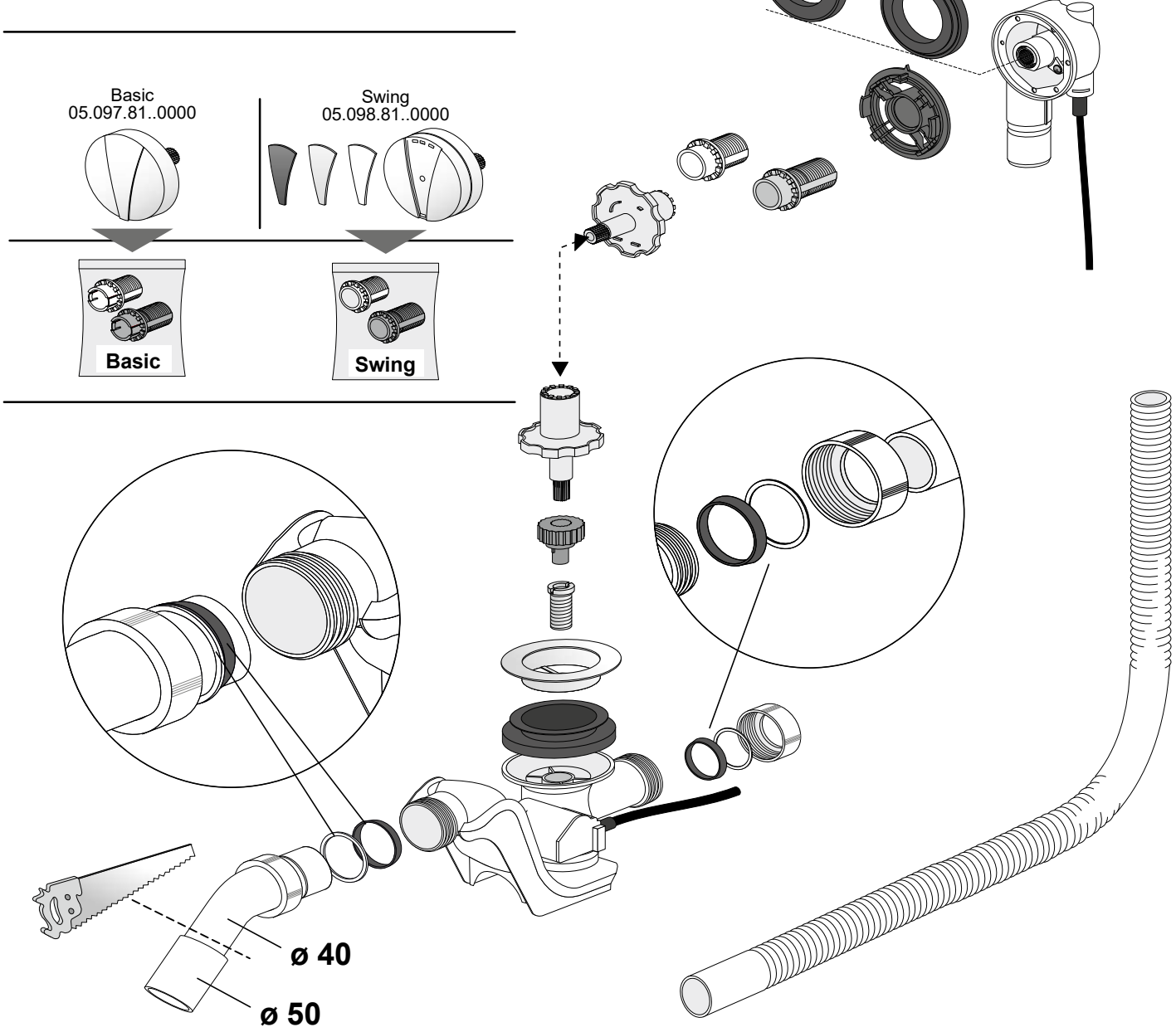
ø 40
ø 50

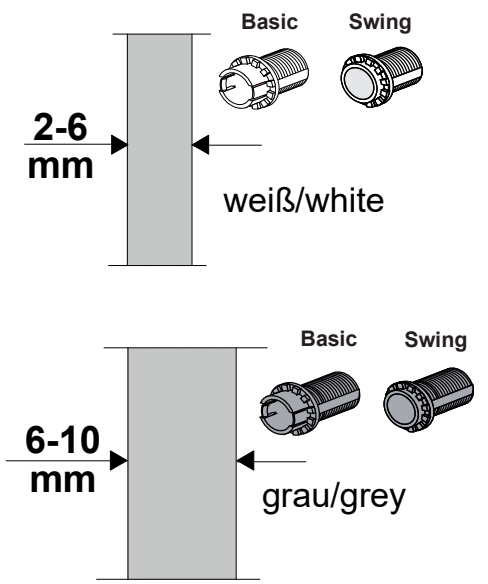
Basic
Swing
2-6
mm
weiß/white
Basic
Swing
6-10
mm
grau/grey

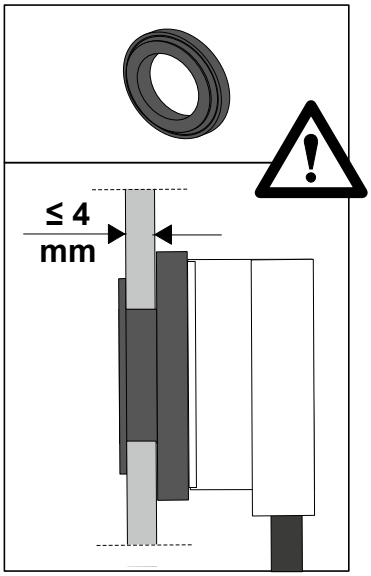
≤ 4
mm

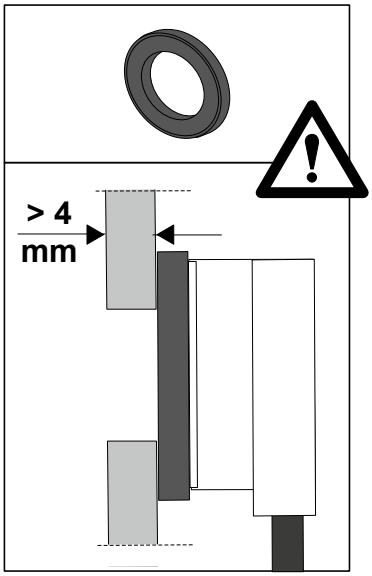
> 4
mm

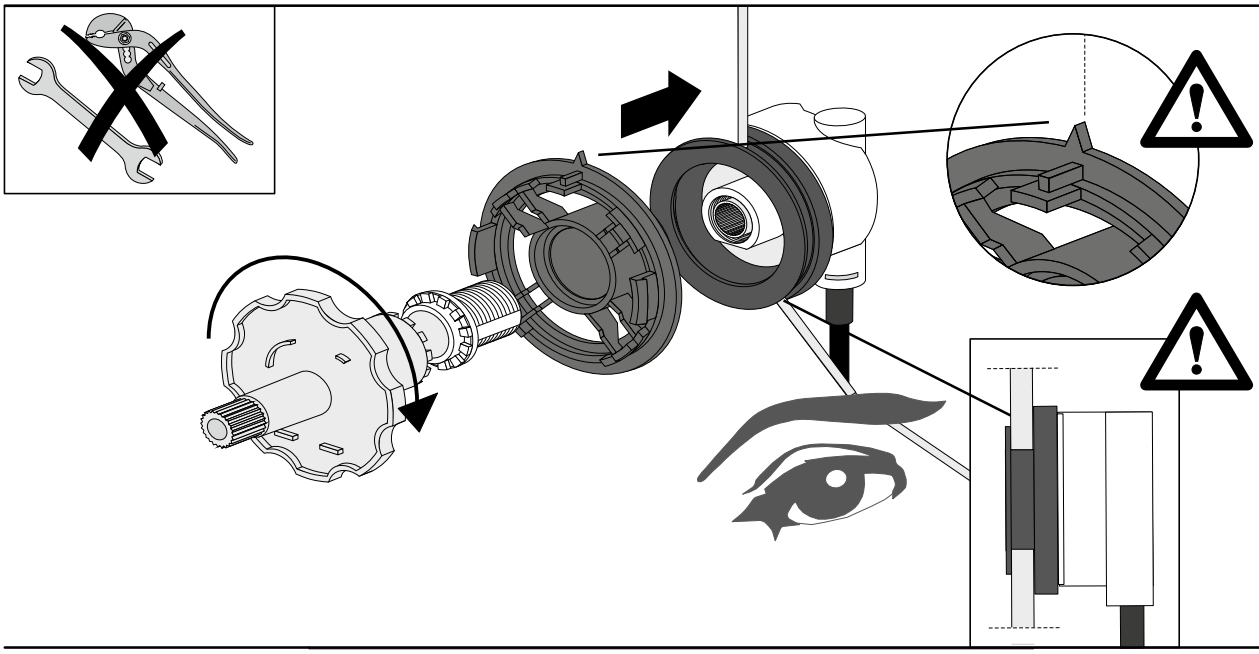

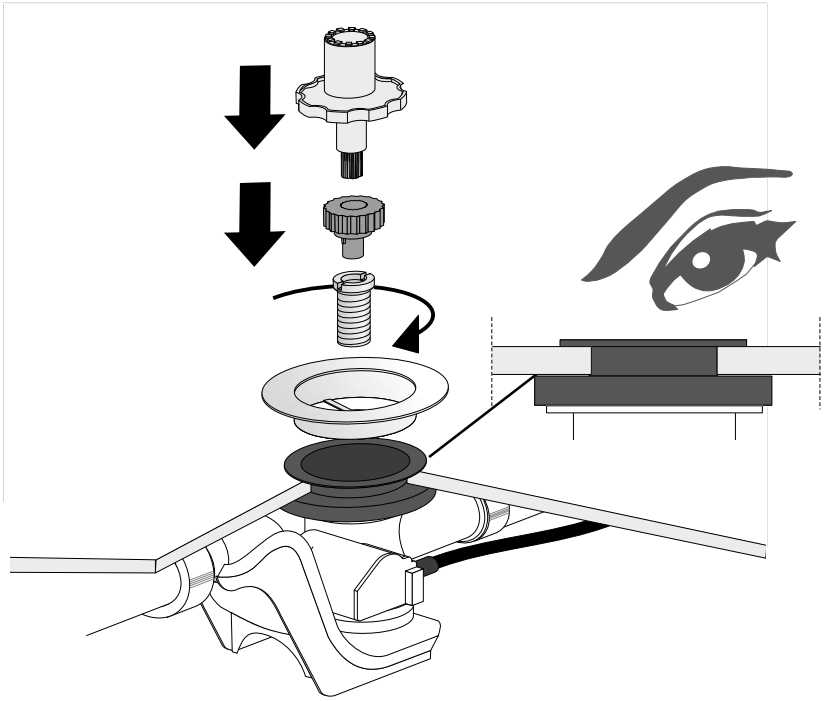

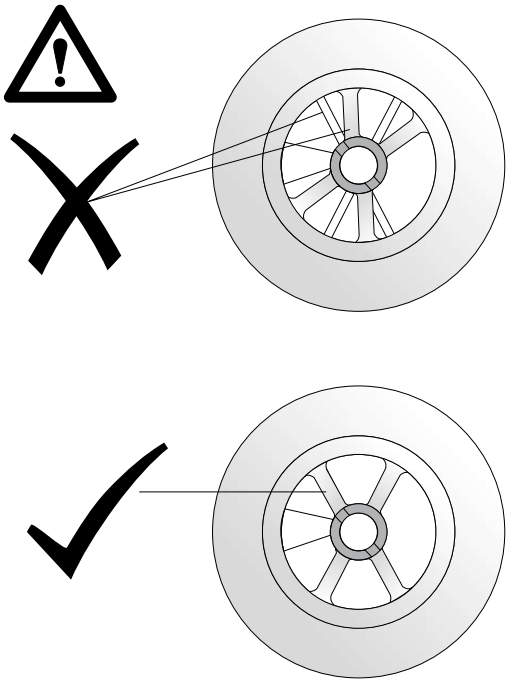

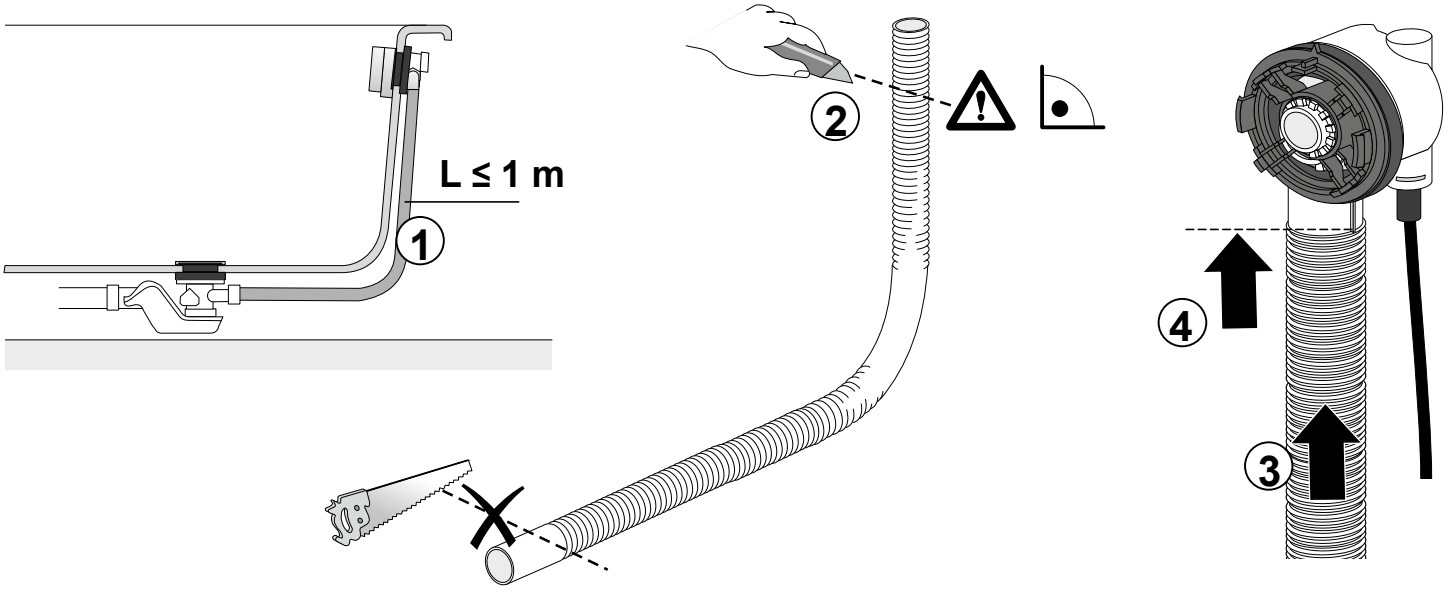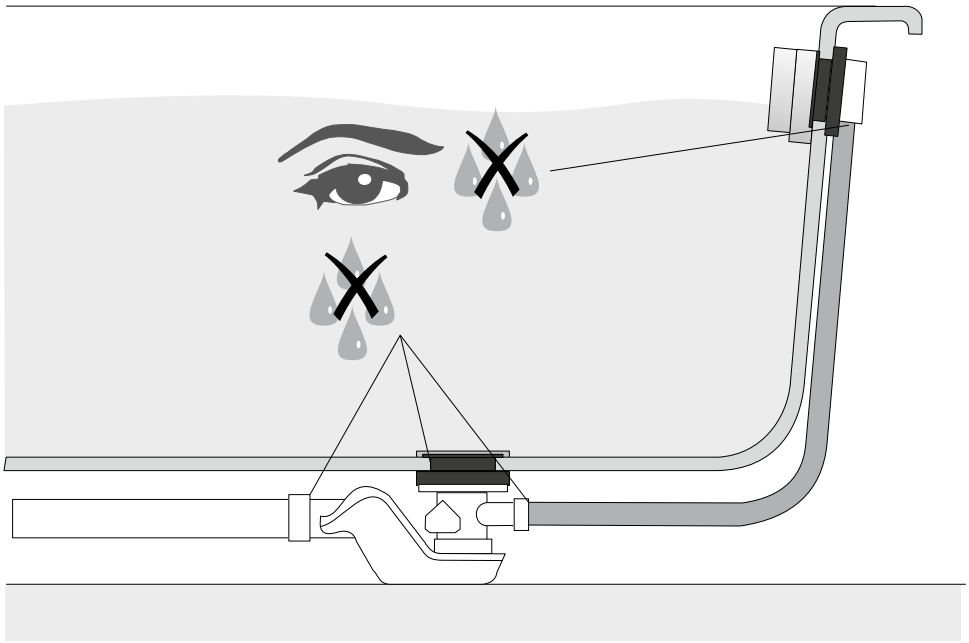
L ≤ 1 m
1
2
3
4